EENG 573: Electric Power Quality

Dr. Salman Mohagheghi

Course Project, Spring 2026

Overview

This is a simulation project in which you will be modeling, testing, and mitigating various power quality issues that we have studied in this course. You are free to choose any software package with which you feel more comfortable, including but not limited to MATLAB/Simulink and PSCAD.

Problem Statement

A municipal electric utility owns and operates a small-scale 4.16 kV distribution system shown below [1]. The system consists of a combination of overhead lines and underground cables, unbalanced loading, a voltage regulator at the distribution substation, and two capacitor banks. In your analysis, consider node 650 as the PCC.

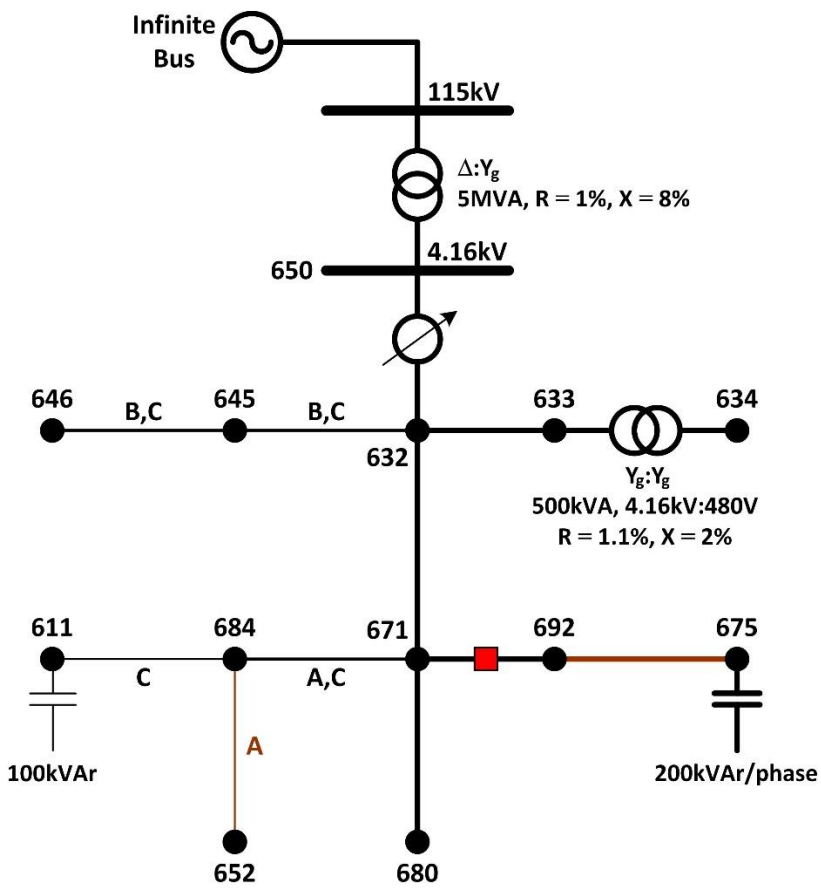

Your project report should closely follow the structure outlined below. Deliverables for each section are highlighted in blue. No additional results or discussions are required.

A. Base Case

As the first step, you need to simulate the system in your software of choice. Note that the Simulink model of the above system is publicly available through the MathWorks website and if desired, may be used for the purpose of this project.

If on the other hand you choose to model the system yourselves or decide to use a different software package, follow the assumptions below:

- Model all loads as spot loads, with the data provided below.

- Model all lines as short lines (i.e., series R and X), with the data provided below.
- The voltage regulator can be modeled as an ideal three-phase transformer with ±10% tap range (consider 16 tap positions in each direction, which is the common industry practice). Assume that the regulator is located at the quarter length of the line connecting node 650 to node 632 and is controlled in such a way that it regulates the voltage at node 632 to be at rated value, i.e., 1.0 per unit.
- Capacitor banks are fixed, i.e., not switchable.

Node	Load Connection/Type	A		B		C	
		P (kW)	Q (kVAr)	P (kW)	Q (kVAr)	P (kW)	Q (kVAr)
632	Y-PQ	17	10	66	38	117	68
634	Y-PQ	160	110	120	90	120	90
645	Y-PQ	0	0	170	125	0	0
646	Δ-Z	0	0	230	132	0	0
652	Y-Z	128	86	0	0	0	0
671	Δ-PQ	385	220	385	220	385	220
675	Y-PQ	485	190	68	60	290	212
692	Δ-PQ	0	0	0	0	170	151
611	Y-PQ	0	0	0	0	170	80

Line Segment	Line Length (feet)	Type	R (Ω/mile)	X (Ω/mile)
650 – 632	2,000	OH, Three Phase	0.3465	1.0179
632 – 633	500	OH, Three Phase	0.7526	1.1814
632 – 645	500	OH, Two Phase (B, C)	1.3294	1.3471
645 – 646	300	OH, Two Phase (B, C)	1.3294	1.3471
632 – 671	2,000	OH, Three Phase	0.3465	1.0179
671 – 680	1,000	OH, Three Phase	0.3465	1.0179
671 – 684	300	OH, Two Phase (A, C)	1.3238	1.3569
684 – 652	800	UG, Single Phase (A)	1.3425	0.5124
684 – 611	300	OH, Single Phase (C)	1.3292	1.3475
692 – 675	500	UG, Three Phase	0.7982	0.4463

Deliverables:

- A single graph of node voltage magnitudes (all in per-unit) in the form of a bar plot, one bar for each node (if a node consists of multiple phases with voltage imbalance, show those separately). Clearly label nodes and indicate thresholds of 0.95 and 1.05 per-unit.
- Values of the total active and reactive powers (in kW and kvar) supplied through the PCC.

B. Electric Vehicle Charging Station (EVCS)

A proposal has been made to the utility to install a large-scale commercial EVCS with multiple level 2 chargers at node 680. For the purpose of this project, model the charging station as a 6-pulse AC/DC rectifier rated at 400 kW DC. Consider hourly stepwise variations in charging load at 10%, 40%, 70%, 100%, and 50% of the rated value (model each hour as at least 10 seconds of simulation time).

Deliverables:

- Plot of rms voltage/current at node 680 (all in per-unit).

C. Solar Park

A second proposal is to install a 1 MVA solar park at node 671. Assume that the park operates under MPPT conditions. Model and simulate the solar resource in software. Many software packages have embedded blocks to model solar resources. Feel free to use those, i.e., you do not need to start from scratch. However, the model you adopt should allow for changing solar irradiance, as the input to the solar park, due to cloud movements. Consider a windy and cloudy day, so that solar power variations may affect system voltages and currents in a non-negligible way. You can use historical data for any location of interest to support your choice of cloud coverage and wind speed variations. Similar to the EVCS analysis, consider at least 10 seconds of simulation time to equate one hour in real-life.

Deliverables:

- Screenshot of the solar park model and its controller, with self-explanatory annotations.
- Discussion on how variations in solar irradiance due to cloud coverage are modeled.
- Plot of rms voltage/current at node 671 (all in per-unit).

D. Power Quality Analysis

Our goal in this step is to assess the impact of the above proposals on the overall power and voltage quality of the system. Assume that both proposals have been implemented in the system and operate as described in the previous steps. Run the model and closely monitor the electrical quantities in order to identify the worst-case scenario from a power quality perspective.

Deliverables:

- Identify the worst-case scenario and discuss its characteristics, i.e., what makes it problematic.
- Bar graph indicating node voltages (all in per-unit) under the worst-case scenario. Clearly label nodes and indicate thresholds of 0.95 and 1.05 per-unit.
- Plot of voltage harmonics at the PCC (all in per-unit) under the worst-case scenario. Include as many harmonics as necessary. Clearly indicate the threshold of 1.0 per-unit.
- Plot of current harmonics at the distribution transformer (all in per-unit) under the worst-case scenario. Include as many harmonics as necessary. Clearly indicate the threshold of 1.0 per-unit.
- Table listing the calculated voltage THD at the PCC and the current TDD at the distribution transformer, under the worst-case scenario.

E. Mitigation

The utility wishes to ensure that power quality of the entire system remains acceptable. As a power quality consulting firm, you have been asked to study the system (when all proposals are approved), propose mitigation solutions to counter any power quality issues, and verify the effectiveness of your solutions. Consider the worst-case scenario identified above.

Deliverables:

- Discussion of the solution(s) proposed and the justification behind it.
- Bar graph indicating node voltages (all in per-unit) under the worst-case scenario with the implemented solution. Clearly label nodes and indicate thresholds 0.95 and 1.05 per-unit.
- Table(s) quantifying power quality issues before and after mitigation.

EENG 573: Electric Power Quality
Dr. Salman Mohagheghi
Course Project, Spring 2026

Rubric

Section	Description	Points
Base Case	Voltage bar graph is provided and is accurate	1
	Total active and reactive powers through the PCC are provided and the values are close to the total load	1
EVCS	Plots of rms voltage/current at node 680 are provided and they clearly show changes based on the operation schedule of the EVCS	2
Solar Park	Solar resource is modeled with reasonable detail, including irradiance variations due to cloud movements in the sky	2
	Plots of rms voltage/current at node 671 are provided and they clearly show changes based on the variations in solar irradiance	1
Power Quality Analysis	Worst-case scenario is identified and discussed	1
	Voltage bar graph is presented and is accurate	1
	Plot of voltage harmonics at PCC is presented and is accurate	1
	Plot of current harmonics at the distribution transformer is presented and is accurate	1
	THD and TDD values are calculated properly	1
Mitigation	The solution proposed by the team is innovative and demonstrates outside-the-box thinking. The novelty of your solution may be compared to those proposed by other groups	3
	Appropriate metrics/graphs are shown to compare the system power quality before and after mitigation	3
Report	Report is well-written, professional, and clear and is limited to 5 pages[1] (excluding references and the appendix)	1
	All graphs are legible and properly labeled	1
	Total	**20**

References:

[1] IEEE PES Test Feeders, [Online]. Available at: https://cmte.ieee.org/pes-testfeeders/resources/.

[1] All essential diagrams listed under the deliverables must be included in the body of the report. Appendix must be reserved for non-essential information.